S&P SPARE PARTS
C.so Sempione 238/5
Busto Arsizio (VA)
Tel: 0331 324 053 - Fax: 0331 671 063
http://www.sep-spareparts.com/

22/12/2024

6116087

MONOHOLE MIXER WITH SHOWER

Date: 22-12-2024

Recommended by S&P
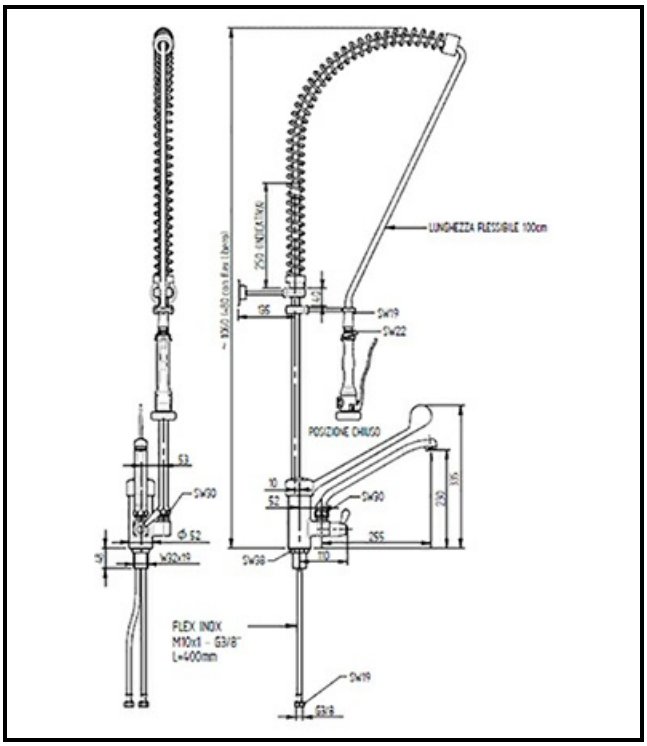
Technical data