6116095

TWO HOLES TAP SWINGING C SPOUT 250mm

Date: 05-04-2025
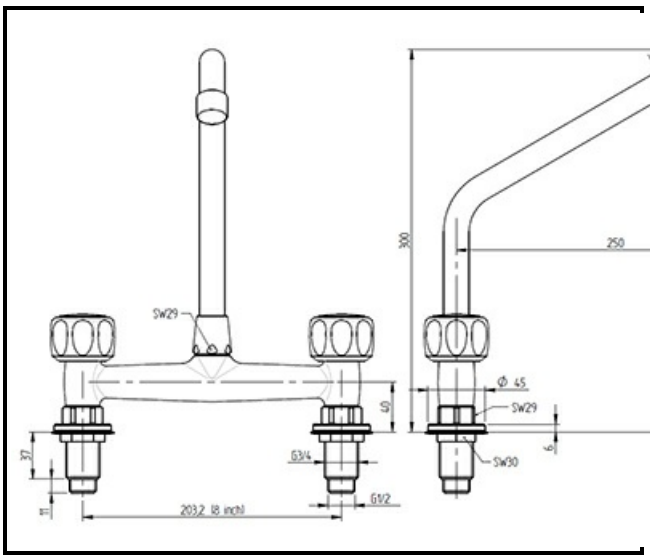
Technical data