S&P SPARE PARTS
C.so Sempione 238/5
Busto Arsizio (VA)
Tel: 0331 324 053 - Fax: 0331 671 063
http://www.sep-spareparts.com/

31/01/2025

6116091

MONOHOLE MIXER WITH CLINICAL LEVER L250MM

Date: 31-01-2025
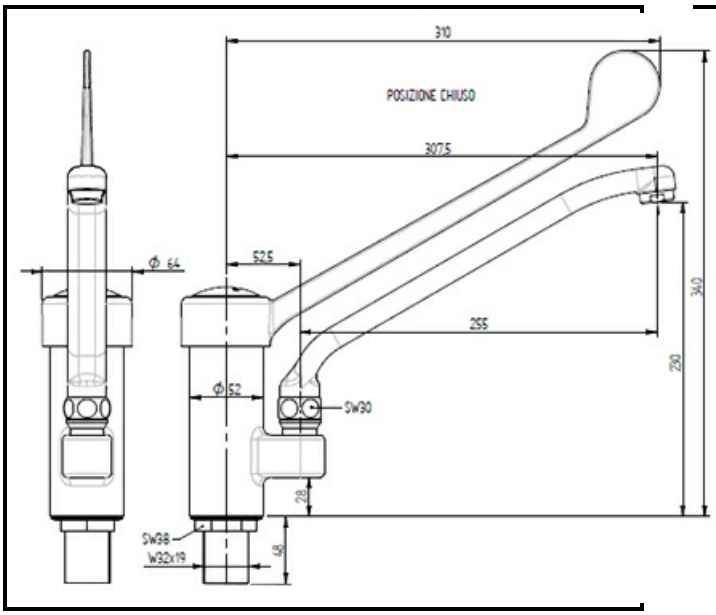
Technical data