S&P SPARE PARTS
C.so Sempione 238/5
Busto Arsizio (VA)
Tel: 0331 324 053 - Fax: 0331 671 063
http://www.sep-spareparts.com/

22/01/2025

4127074

"DRAIN COCK 2"""

Date: 22-01-2025

Technical data

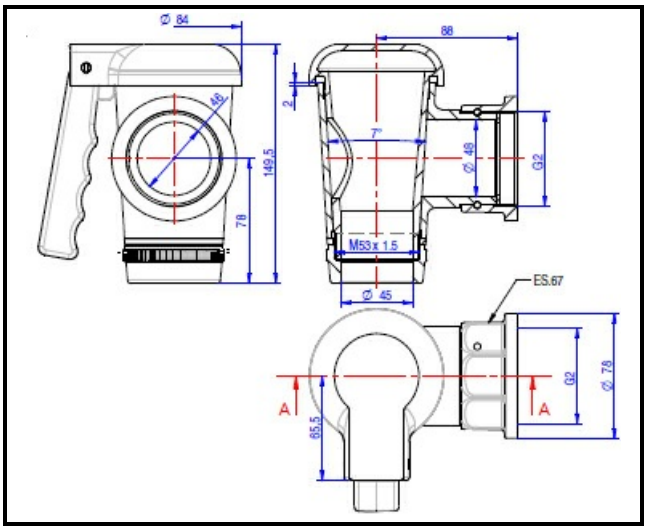

Manufacturer code

ELECTROLUX PROFESSIONAL S.P.A.
ELECTROLUX PROFESSIONAL S.P.A.
ELECTROLUX PROFESSIONAL S.P.A.
ELECTROLUX PROFESSIONAL S.P.A.